Manualslib.com - The Global Manuals Library

AI RD-03E USER MANUAL

Quick Links

Software Description
Communication Protocol

Table of Contents

Table of Contents
Rd-03E Overview
System description
Hardware Description
Software Description
Communication protocol
Installation instructions
Detection range
Rendering
Gesture Description
Gesture Definition
gesture speed
gesture parameters
Considerations
Contact us
Disclaimer and copyright notice
Notice
Statement
Other ManualsLib Projects

Rd-03E Gesture Recognition User Manual

Version V1.0.0

Copyright ©2023

Copyright © 2023 Shenzhen Ai-Thinker Technology Co., Ltd All Rights Reserved

Document resume

Version	Date	Develop/revise content	Edition	Approve
V1.0.0	2023.9.14	First formulation	Zhanyun Lin	Zifeng Chen

Copyright © 2023 Shenzhen Ai-Thinker Technology Co., Ltd All Rights Reserved

Introduction

This document describes the basic functions, hardware specifications, software configuration, and installation conditions of the Rd-03E gesture recognition control reference design XenG102ST. It aims to help developers quickly get started with human sensing and gesture recognition solutions based on Xen102 hardware, easily configure parameters that are most suitable for their own application scenarios, and build their own accurate gesture recognition control sensors.

Copyright © 2023 Shenzhen Ai-Thinker Technology Co., Ltd All Rights Reserved

Content

1 Rd-03E Overview 5
2 System description 5
3 Hardware Description 6
4 Software Description 7
5 Communication protocol 9
6 Installation instructions 10
7 Detection range 11
8 Rendering 13
9 Gesture Description 13
9.1 Gesture Definition 13
9.2 gesture speed 14
9.3 gesture parameters 14
10 Considerations 15
Contact us 16
Disclaimer and copyright notice 17
Notice 17
Statement 18

Copyright © 2023 Shenzhen Ai-Thinker Technology Co., Ltd All Rights Reserved

1 Rd-03E Overview

Rd-03E gesture recognition control reference XenG102ST design with extremely simplified 24 GHz radar sensor hardware Xen102 and smart algorithm firmware ST01.

The Xen102 hardware consists of an AIoT millimeter-wave radar chip S3KM111L, a high-performance one-transmitter-one-receiver microstrip antenna, a low-cost MCU and peripheral auxiliary circuits. Smart Algorithm Firmware ST uses FMCW waveform and S3KM111L chip proprietary advanced signal processing technology. This reference scheme is mainly used in intelligent bathroom scenes, which can realize accurate human body sensing ranging and gesture recognition. Developers can display the distance information and gesture information in real time through the host computer tool.

The radar beam of Xen102 hardware adopts wide and narrow design, and the angle range of antenna 4 patch direction is ± 20 °, and the angle range of vertical antenna 4 patch direction is ± 40 °. The user can adjust the antenna placement direction during installation according to the needs of the scene. In toilet applications, it is recommended to use a horizontal narrow beam to avoid false triggering by passing people around.

2 System description

Rd-03E is a gesture recognition control reference design based on silicon micro-S3KM111L chips. The sensor uses FMCW waveforms, combined with the MCU's proprietary radar signal processing and built-in intelligent presence sensing algorithms to detect targets and gestures in a specified area and report results in real time. Based on this reference solution, developers can quickly develop corresponding induction products. Table 2-1 shows the specification parameters of the Rd-03E.

Table 2-1 Rd-03E Specifications

Parameters	Minimum	Typical	Max.	Unit
Working frequency band	24.015	-	24.245	GHz
Sweep bandwidth	-	0.23	-	GHz
Maximum equivalent omnidirectional radiated power	-	12	-	dBm
Supply voltage	4.6	5	5.4	V
Dimensions	-	28x24	-	mm^2
Ambient temperature	-40	-	85	℃

Copyright © 2023 Shenzhen Ai-Thinker Technology Co., Ltd All Rights Reserved

Average operating current	-	50	-	mA
Detection distance	0.3	-	2.2	m
Detection angle (H plane)	-	±40	-	°
Detection angle (E plane)	-	±20	-	°
ranging error	-	-	±10	cm

3 Hardware Description

Rd-03E supported hardware is Xen102. Figure 3-1 is a photo of the front and back of the Rd-03E. Five pin holes J2 are reserved for the Rd-03E hardware (no pin is provided at the factory), which are the power supply and communication interface. The MCU burning port is called J3. Please connect according to the corresponding pin name when burning. (J1 is reserved for USB interface, which is not introduced in this document for the time being.)

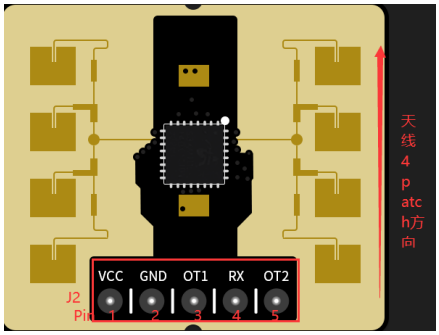

(a)front

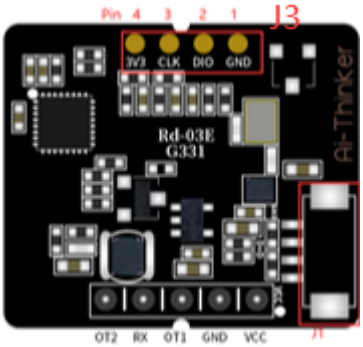

(b)back

Figure 3-1 Rd-03E hardware physical diagram

The pin descriptions of J2 and J3 are shown in Table 3-1 and Table 3-2.

Table 3-1 J2 Pin Description

J#PIN#	Name	Function	Operating Range
J2Pin1	VCC	Power input	4.5V~5.5V,Type5V
J2Pin2	GND	Ground	-
J2Pin3	OT1	UART_TX	0~3.3V
J2Pin4	RX	UART_RX	0~3.3V
J2Pin5	OT2	UART_TX(reserved)	0~3.3V

Table 3-2 J3 Pin Description

J#PIN#	Name	Function	Operating Range
J3Pin1	GND	Ground	-
J3Pin2	DIO	Data port	0~3.3V
J3Pin3	CLK	Clock signal	0~3.3V

Copyright © 2023 Shenzhen Ai-Thinker Technology Co., Ltd All Rights Reserved

J3Pin4	3V3	Power input	3.3V

Rd-03E supports keil 5 IDE to burn hex files or source code projects. You can use J-Link (V9 or above), CMSIS-DAP and other burners to download programs. Please make sure it is installed before burning. GigaDevice.GD32E23x_DFP.1.0.1.pack and ARM.CMSIS.5.7.0.pack or a later version of the CMSIS pack.

4 Software Description

Rd-03E the hardware uses 5V power supply. When connecting hardware and serial port tools, attention should be paid to the connection mode of hardware and serial port tools: TX of hardware is connected to RX of serial port tools, RX of hardware is connected to TX of serial port tools, and jumpers are connected to 5v power supply, as shown in fig. 4-1. If you use other serial port tools, also need to meet the 5V power supply.

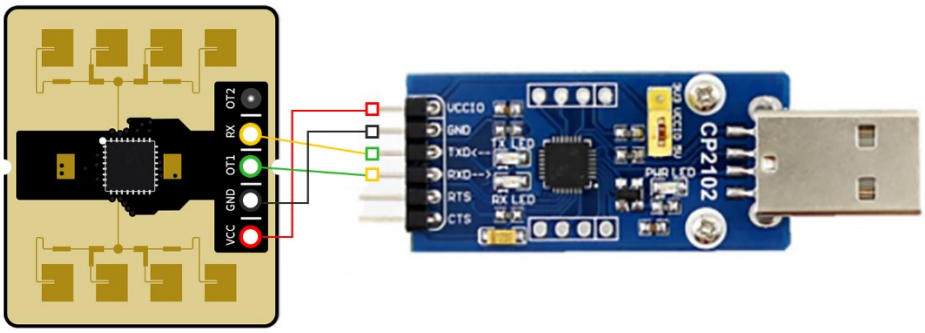

Figure 4-1 Schematic diagram of Rd-03E module and serial port connection

After connecting the hardware, serial port tool and upper computer as shown in Figure 4-1, open the upper computer software ICLM_XenG102STTool and configure the module according to the following steps:

Step 1: Open the upper computer software, click the "Refresh Serial Port" button in the upper left corner of the interface (Figure 4-2 marked area 1), if the distance curve graph appears below the interface, it indicates that the connection is successful;

Step 2: After the module is successfully connected to the upper computer, select the corresponding serial port number in the upper left corner of the interface (No. 2 area marked in Figure 4-2) and enter the baud rate, fill in the reporting cycle according to the reporting frequency of the firmware, and the reporting cycle of the factory firmware is 50 ms;

Step 3: Click the "Start/Stop" switch button (area 3 marked in Figure 4-2) to receive real-time data from the radar and view the real-time waveform of the target distance at the bottom of the upper computer interface. The window above the interface (area 4 marked in Figure 4-2) can display the distance information of the target and the toilet status in real time.

Copyright © 2023 Shenzhen Ai-Thinker Technology Co., Ltd All Rights Reserved

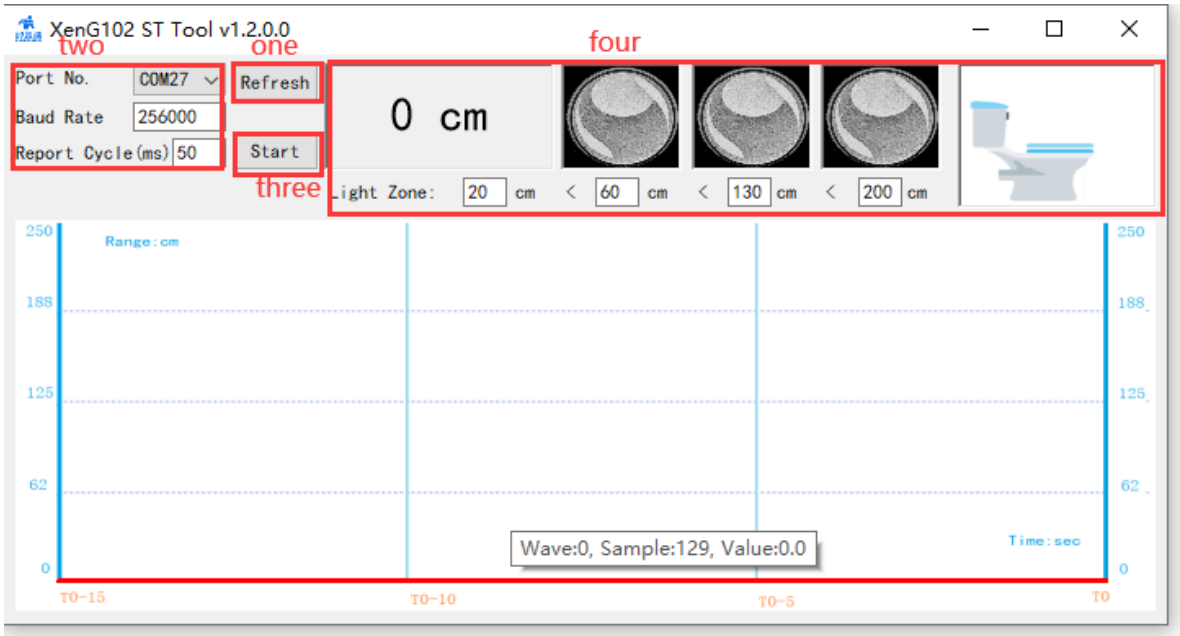

Figure 4-2 Upper computer tool ICLM_XenG102STTool configuration interface

The distance information can divide the gears by setting different distances. The upper computer tool divides the sensing distance into 3 gears, which are respectively represented by colored lights of different positions and colors. The display principle is as follows:

- When the target distance is between 0cm and 60cm, the leftmost red light is on, and the lights in other gears are off;
- The yellow light in the middle of the target distance of 60cm and all 130cm is on, and the lights on both sides are off;
- The green light on the right side of the target distance of 130cm to 200cm is on, and the two lights on the left are off.

The target distance interval and the on-off state of the colored lights are shown in Figure 4-3. The distance interval corresponding to each gear can be customized through the upper computer tool interface.

Target distance interval(cm)	Light zone display
Zero～ Sixty	
Sixty～ One Hundred Thirty	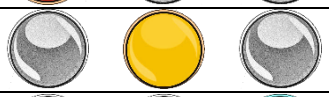
One Hundred Thirty～Two Hundred	

Figure 4-3

Toilet cover ring 5 different states, respectively:

- No one (the cover ring is closed by default);
- Open the cover by a person (when the cover is closed);

Copyright © 2023 Shenzhen Ai-Thinker Technology Co., Ltd All Rights Reserved

- Gesture flip cover (in open state);
- The cover is closed by people (when the cover is opened);
- Close the cover when the person goes through the closing circle (in the state of opening the cover circle);

A schematic diagram of the above state is shown in FIG. 4-4.

(a) No one state (b) People come to open the cover (c) Gesture circle turning

(d) people go to close the cover (e) people go to close the cover

Figure 4-4 Schematic Diagram of Toilet Status

The unmanned delay refers to the time interval for delaying the report of the unmanned result when the radar self-detects the unmanned state. Developers can adjust the parameter by modifying the parameter NobodyDebounceTime = "1000 ° in the XenG102STTool/appConfig.xml file under the root directory of the host computer tool, and its default value is 1000 ms.

5 Communication protocol

This communication protocol is mainly used by developers who need to separate from visualization tools for secondary development. The Rd-03E hardware communicates with the outside world through the serial port. The serial port outputs the radar data processed by the algorithm by frame. The format of a frame of data is:

AA + distance information (two bytes in cm) + gesture information (1 byte) +55

The distance information is in little-end format, and the data example is shown in Figure 5-1. The output delay of the gesture result is about 0.25s.

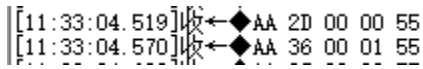

Radar serial port data parsing distance is as follows：

Copyright © 2023 Shenzhen Ai-Thinker Technology Co., Ltd All Rights Reserved

AA 2D 00 00 55, then distance = 002D = 45cm, gesture = 00, no gesture.

AA 36 00 01 55, then distance = 0036=54cm, gesture = 01, gesture.

The distance information can be displayed by the host computer tool, as shown in Figure 5-1. The top of the software interface shows the target distance measured by the millimeter wave radar, the far right is the toilet state, and the red curve below the interface is the real-time distance waveform.

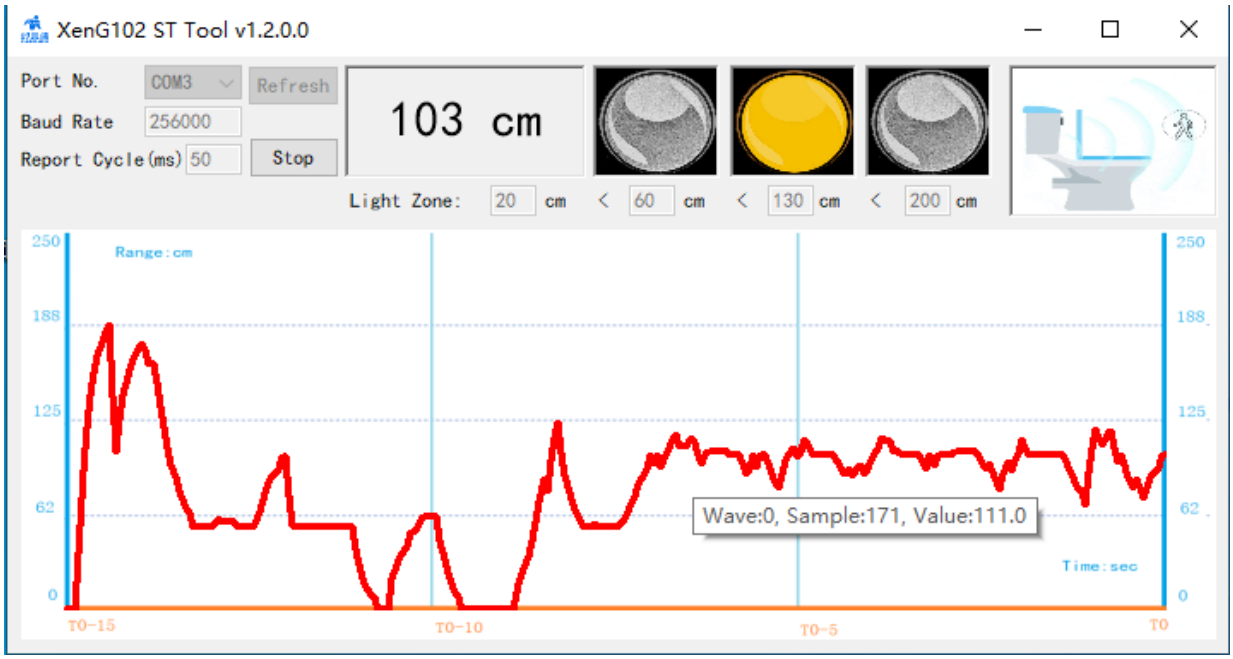

Figure 5-1 Rd-03E gesture recognition PC tool interface diagram

6 Installation instructions

When installing the module on the bare board, the installation position should be 45cm higher than the ground, and the placement angle should be 45 upward, as shown in Figure 6-1. When installing, pay attention to the antenna direction, and the antenna 4 patch direction should be taken as the horizontal direction.

When the module is installed on the toilet, the recommended installation angle is the same as that of the bare board installation, which is 45 ° upward.

Copyright © 2023 Shenzhen Ai-Thinker Technology Co., Ltd All Rights Reserved

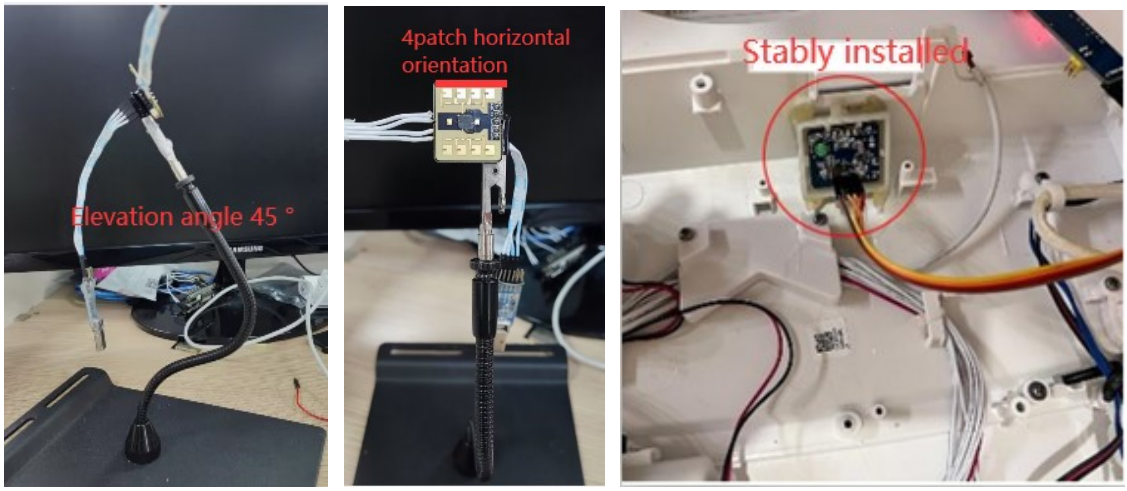

Figure 6-1 Schematic diagram of Rd-03E module installation

If the radar requires an enclosure, the enclosure must have good permeability in the 24 GHz band and must not contain metal or materials that shield against electromagnetic waves. Refer to the Millimeter Wave Sensor Radome Design Guide for additional radar enclosure considerations.

When installing, ensure that the installation position of the sensor is firm and stable, because the shaking of the radar itself will affect the detection effect. Make sure that there is no movement or vibration on the back of the radar. Due to the penetrating nature of radar waves, the back flap of the antenna may detect moving objects on the back of the radar, thus interfering with the detection. A metal shield or a metal back plate can be used to shield the back flap of the radar to reduce the impact of objects on the back of the radar.
When there are multiple 24 GHz band radars in the installation space, please do not face the beams and try to stay away from each other to avoid possible interference.

7 Detection range

After the module is installed, take the module position as the center of the circle, the detection angle of H plane is within ± 40 °, and the detection angle of E plane is within ± 20 ° (the directions of H plane and E plane of the radar are shown in Figure 7-1). The power diagram of the radar is shown in Figure 7-2, in which: the angle range of moving human body recognition is ± 20 °, and the distance range is 0.3~2.2 m fan-shaped area; the angle range of gesture recognition and micro-motion human body detection is ± 30 °, and the distance range is 0.5~1 m fan-shaped area. The range of radar gesture recognition in the toilet application is shown in Figure 7-3.

Copyright © 2023 Shenzhen Ai-Thinker Technology Co., Ltd All Rights Reserved

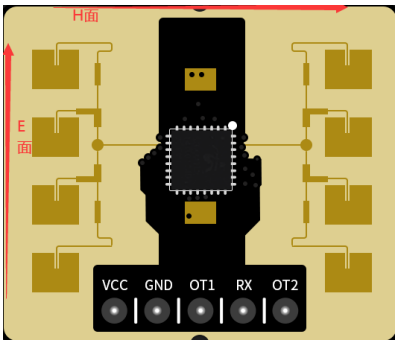

Figure. 7-1 Radar Installation Orientation Identification

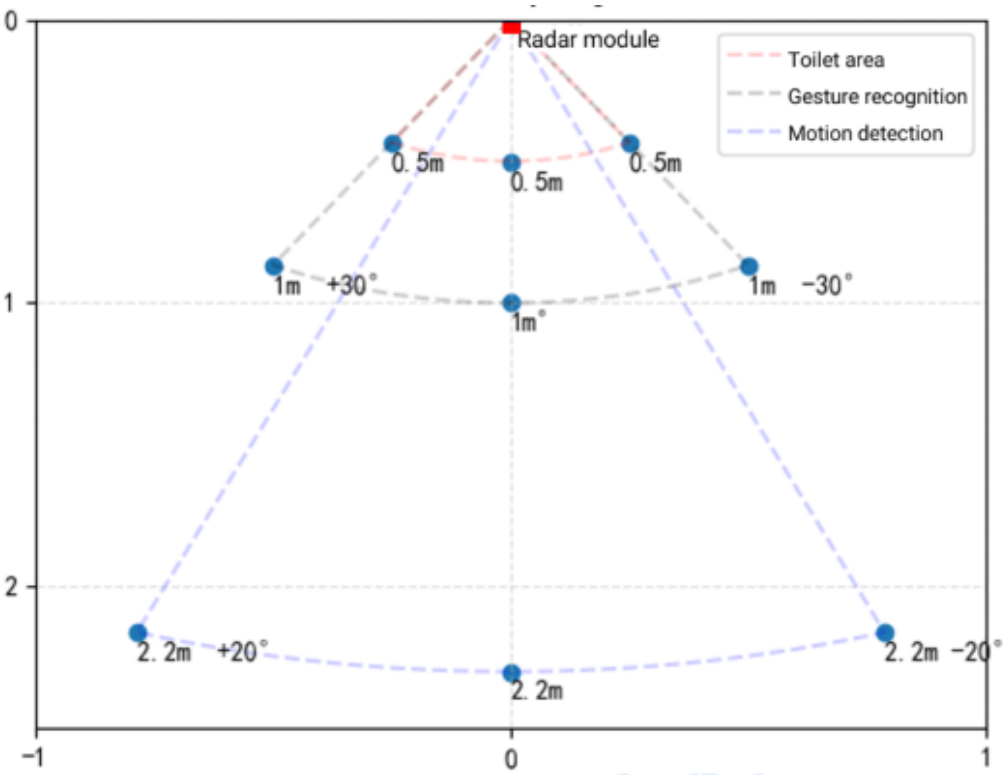

Figure 7-2 Radar Power Diagram

Copyright © 2023 Shenzhen Ai-Thinker Technology Co., Ltd All Rights Reserved

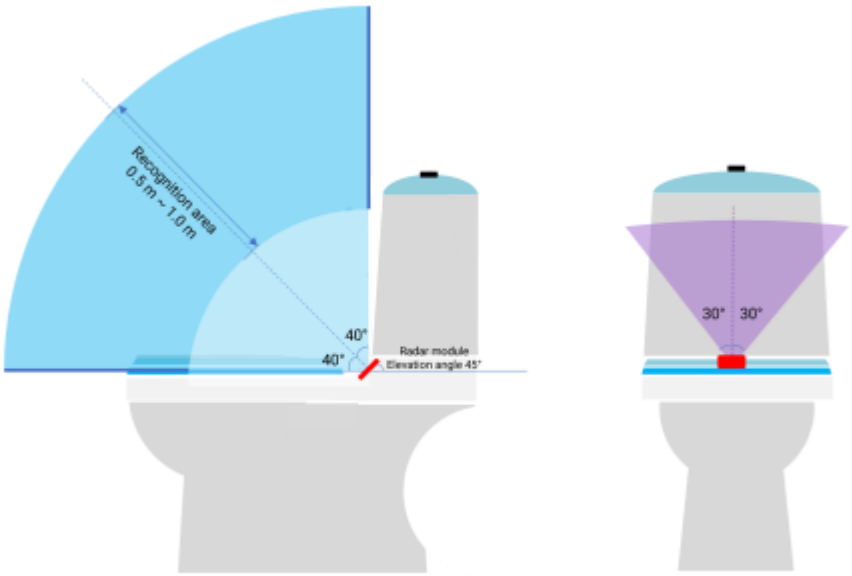

Figure 7-3 Schematic diagram of radar gesture recognition area

8 Rendering

Figure 8-1 shows the mechanical dimensions of the Rd-03E hardware. The figures in the figure are in mm, with a Rd-03E plate thickness of 1.2mm and a tolerance of 10%.

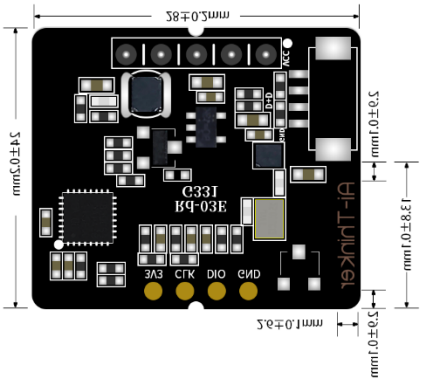

Figure 8-1 Rd-03E rendering

9 Gesture Description

9.1 Gesture Definition

When sending gesture commands to the radar, the person should stand facing the radar with his arms as close as possible to the main beam of the radar. Depending on the relative orientation of the standing position and the radar, the action arm should be adjusted accordingly, as shown in Figure 9-1.

Copyright © 2023 Shenzhen Ai-Thinker Technology Co., Ltd All Rights Reserved

Figure 9-1 Position of Human and Radar When Sending Radar Gestures

Waving the front hand naturally droop, swing the palm up, raise the upper arm to the upper arm perpendicular to the ground, and then keep the palm up to let the arm naturally fall back, as shown in Figure 9-2. The arm should naturally move up and down in the vertical direction during the swing, not oblique to the inside or outside of the body. The two gesture waves should be more than 1.5 seconds apart. When testing the radar installed on the toilet, the waving arm should pass above the center of the toilet (ie, the toilet flush hole).

Figure 9-2 Schematic diagram of gesture waving

9.2 gesture speed

The arm swings back and forth from bottom to top at a constant speed in about 1.5s.

9.3 gesture parameters

Table 9-1 lists the configuration and description of gesture parameters.

Table 9-1 Gesture parameter description

Parameter Name	Default Configuration	Description
GESTURE_DISTANCE_LIMIT	120	Gesture effective distance (unit: cm)
PARAM_SLIDEFRAMECNT	5	Sliding window size
PARAM_SLIDEFRAMECNT	4	positive Doppler

Copyright © 2023 Shenzhen Ai-Thinker Technology Co., Ltd All Rights Reserved

		reference value
PARAM_SLIDEFRAMECNT	-4	Negative Doppler Reference Value
ARAM_DOPPLERNUM_P	1	number of positive doppler
PARAM_DOPPLERNUM_N	1	number of negative doppler
PARAM_HIGHSPEED_DOPPLERVALUE	9	high-speed Doppler value
PARAM_INVALID_FRAME	14	Invalid Frame Count
PARAM_TARGET_RNGBIN	3	Gesture Distance Unit
PARAM_NOISE_COEF	2.2	bottom noise coefficient
PARAM_HIGHSPEED_DOPPLERNUM	0	high speed doppler quantity
PARAM_WAVECNT_THD	3	Swing Statistics
PARAM_PNNUM_CNT	2	Number of positive and negative alternations
PARAM_WAVENUM_THD	50	frame times threshold
PARAM_GESTURECNT_THD	2	Half swing threshold

10 Considerations

- At present, the algorithm is debugged in three ways: bare module, silicon microshell and silicon microshell + toilet cover. Since there may be differences in the structure of toilet covers of different brands and models, when the customer places this module in the toilet, he may encounter abnormal ranging or abnormal gesture. At this time, please print 1DFFT data or rdmap data, and adjust the link gain or detection parameters according to the data.
- At present, this firmware only supports continuous ranging and gesture output, and does not enable discharge level trigger or PWM mode. Customers can independently develop it in the released SDK according to specific requirements.

Copyright © 2023 Shenzhen Ai-Thinker Technology Co., Ltd All Rights Reserved

Contact us

Ai-Thinker official website Official Forum Develop DOCS LinkedIn

Tmall shop Taobao shop Alibaba shop

Technical support Email: support@aithinker.com

Domestic business cooperation: sales@aithinker.com

Overseas business cooperation：overseas@aithinker.com

Company address: Room 403,408-410, Block C, Huafeng Smart Innovation Port, Gushu 2nd Road, Xixiang, Baoan District, Shenzhen.

Tel: 0755-29162996

WeChat mini

WeChat official

Copyright © 2023 Shenzhen Ai-Thinker Technology Co., Ltd All Rights Reserved

Disclaimer and copyright notice

The information in this article, including the URL address for reference, is subject to change without notice.

The document is provided "as is" without any guarantee responsibility, including any guarantee for merchantability, suitability for a specific purpose, or non-infringement, and any guarantee mentioned elsewhere in any proposal, specification or sample. This document does not bear any responsibility, including the responsibility for infringement of any patent rights arising from the use of the information in this document. This document does not grant any license for the use of intellectual property rights in estoppel or other ways, whether express or implied.

The test data obtained in the article are all obtained from Ai-Thinker's laboratory tests, and the actual results may vary slightly.

All brand names, trademarks and registered trademarks mentioned in this article are the property of their respective owners, and it is hereby declared.

The final interpretation right belongs to Shenzhen Ai-Thinker Technology Co., Ltd.

Notice

Due to product version upgrades or other reasons, the contents of this manual may be changed.

Shenzhen Ai-Thinker Technology Co., Ltd. reserves the right to modify the contents of this manual without any notice or prompt.

This manual is only used as a guide. Shenzhen Ai-Thinker Technology Co., Ltd. makes every effort to provide accurate information in this manual. However, Shenzhen Ai-Thinker Technology Co., Ltd. does not guarantee that the contents of the manual are completely free of errors. All statements and information in this manual. And the suggestion does not constitute any express or implied guarantee.

Copyright © 2023 Shenzhen Ai-Thinker Technology Co., Ltd All Rights Reserved

Statement

Ai-Thinker may provide technical and reliability data (including data sheets), design resources (including reference designs), application or other design recommendations, network tools, safety information and other resources (the "Resources") "as is" without warranties of any kind, express or implied. Including, but not limited to, express or implied warranties of suitability, fitness for a particular use, or non-infringement of any third party's intellectual property rights. And specifically declares that it is not liable for any necessary or incidental losses, including but not limited to, arising from the application or the use of any of our products and circuits.

Ai-Thinker reserves the right to release information in this document (including but not limited to metrics and product descriptions) and any changes to our products without prior notice. This document automatically supersedes and replaces all information provided in previous versions of the same document number file.

These resources are available to skilled developers who design with Ai-Thinker products. You are solely responsible for: (1) Selecting the appropriate Ai-Thinker products for your application; (2) Design, validate, and run your application and product throughout its life cycle; (3) Ensure that your application meets all applicable standards, codes and laws, as well as any other functional security, information security, regulatory or other requirements.

Ai-Thinker may authorize you to use these resources only for the development of applications of Essence Products described in this Resource. Without the permission of Ai-Thinker, any unit or individual shall not extract or copy part or all of these resources, and shall not be transmitted in any form. You are not entitled to use any other Ai-Thinker intellectual property rights or any third party intellectual property rights. You shall indemnify you in full for any claims, damages, costs, losses and liabilities arising against Ai-Thinkeror its representatives in connection with the use of these resources, for which Ai-Thinker is not liable.

The products offered by Ai-Thinker are subject to the terms of sale of Ai-Thinker or other applicable terms attached to Essence's products. Essence's availability of these resources does not extend or otherwise change the warranties or warranties disclaimers applicable to product releases.

Copyright © 2023 Shenzhen Ai-Thinker Technology Co., Ltd All Rights Reserved

Other ManualsLib Projects

www.manualslib.com

www.manualslib.de

www.manualslib.es

www.manualslib.fr

www.manualslib.nl

www.manualslib.mx

www.manualslib.tech 30+ Languages